MECHANICAL SUB-TEAM:

MOEMEN ABDELMONEM

HANEEN MOHAMED

HARDWARE SUB-TEAM:

MOHAMED MAGHAWRY

SAEED AYMAN

SOFTWARE SUB-TEAM:

ROAA YASSER

ALI RABIA

COMPONENTS USED:

4X JGA25-370 250RPM 8.8KGF.CM

1X MG996R SERVO MOTOR (CONTINUOUS ROTATION)

1X S3003 SERVO MOTOR (CONTINUOUS ROTATION)

4X ROBOT WHEEL + COUPLERS (65MM X 25MM)

1X BATTERY PACK 12V 6000MAH

1X ESP32 38PINS DIP

2X L298N MOTOR DRIVE

1X XL4005 BUCK CONVERTER

1X GRIPPER (PLA / PETG)

3X LM393 IR SENSOR

WIRES / CONNECTERS / TERMINAL BLOCKS

ELECTRONIC COMPONENTS (MOSFET REGULATORS / DIODES / CAPACITORS / RESISTORS / SWITCHES)

1X PCB

1X SHEET METAL BODY

MECHANICAL DOCUMENTATION:

EXECUTIVE SUMMARY

THIS REPORT OUTLINES THE MECHANICAL ARCHITECTURE OF A MOBILE ROBOTIC PLATFORM. THE DESIGN PRIORITIZES STRUCTURAL RIGIDITY THROUGH A **1MM GALVANIZED STEEL** CHASSIS, HIGH-TORQUE MOBILITY VIA A **QUAD-DC MOTOR** DRIVETRAIN, AND A **2-DEGREE OF FREEDOM (DOF)** MANIPULATIVE ARM.

DRIVETRAIN & LOCOMOTION

THE ROBOT UTILIZES A 4-WHEEL DRIVE (4WD) CONFIGURATION TO ENSURE MAXIMUM TRACTION AND PAYLOAD CAPACITY.

COMPONENT	SPECIFICATION	FUNCTION
ACTUATORS	4X DC MOTORS	PRIMARY PROPULSION AND SKID-STEERING.
RATED SPEED	250 RPM	BALANCED FOR INDOOR/OUTDOOR TRAVERSAL.
STALL TORQUE	8.8KGF.CM	HIGH TORQUE FOR OVERCOMING STRUCTURAL WEIGHT.
WHEELS	(65MM)	DIRECTLY COUPLED TO MOTOR SHAFTS.

STRUCTURAL FRAMEWORK

THE CHASSIS IS THE BACKBONE OF THE ROBOT, ENGINEERED TO PROTECT INTERNAL ELECTRONICS WHILE PROVIDING MOUNTING POINTS FOR THE MANIPULATOR.

- **MATERIAL:** 1MM GALVANIZED STEEL SHEET

- **FABRICATION METHOD:** PLASMA CUTTING FOLLOWED BY SHEET METAL BENDING.**RIGIDITY:** THE 1MM GAUGE OFFERS HIGH TORSIONAL STIFFNESS, PREVENTING "FRAME TWIST" DURING HIGH-TORQUE MANEUVERS.
- **ASSEMBLY:** FASTENED USING M3/M4 STAINLESS STEEL BOLTS, NUTS, & WASHERS TO WITHSTAND MOTOR VIBRATIONS.

MANIPULATOR DESIGN (ROBOT ARM)

THE ARM IS DESIGNED AS A MODULAR ATTACHMENT POSITIONED AT THE [FRONT/CENTER] OF THE CHASSIS.

BASE ROTATION (AZIMUTH)

- **ACTUATOR: MG996R** HIGH-TORQUE METAL GEAR SERVO.
- **DESIGN NOTE:** THE METAL GEARS ARE ESSENTIAL HERE TO HANDLE THE RADIAL LOADS AND MOMENTUM OF THE ARM'S SWING.
- **RANGE OF MOTION:** 360° HORIZONTAL SWEEP.

END-EFFECTOR (GRIPPER)

- **ACTUATOR: S3003** STANDARD SERVO.
- **MECHANISM:** PARALLEL GRIPPER JAWS WITH A SLIGHT ANGLE FOR BETTER GRIP DUE TO SLACK IN GRIPER LINKS
- **DESIGN NOTE:** THE S3003 PROVIDES PRECISE, LIGHTWEIGHT CONTROL FOR THE JAWS, WHERE HIGH TORQUE IS LESS CRITICAL THAN SPEED AND WEIGHT SAVINGS AT THE "FINGERTIPS.

TECHNICAL CALCULATIONS (ESTIMATES)

TO ENSURE THE MOTORS CAN HANDLE THE STEEL BODY, WE USE THE FOLLOWING RELATION FOR TORQUE (T) REQUIRED PER MOTOR:

- = TOTAL MASS (STEEL CHASSIS + MOTORS + BATTERY + ELECTRONIC COMPONENTS).
- = WHEEL RADIUS.
- = DESIRED ACCELERATION.
- = DRIVETRAIN EFFICIENCY.

GIVEN THE RATING, THIS PLATFORM IS OPTIMIZED FOR A TOTAL WEIGHT OF APPROXIMATELY [~4.7 KG] WHILE MAINTAINING 20 DEGREE INCLINE CAPABILITIES.

MAINTENANCE & SAFETY

- **SHEET METAL SAFETY:** ALL EXPOSED 1MM STEEL EDGES ARE FILLETED TO PREVENT WIRE CHAFING AND TO PROVIDE SAFE HANDLING.

PICTURES

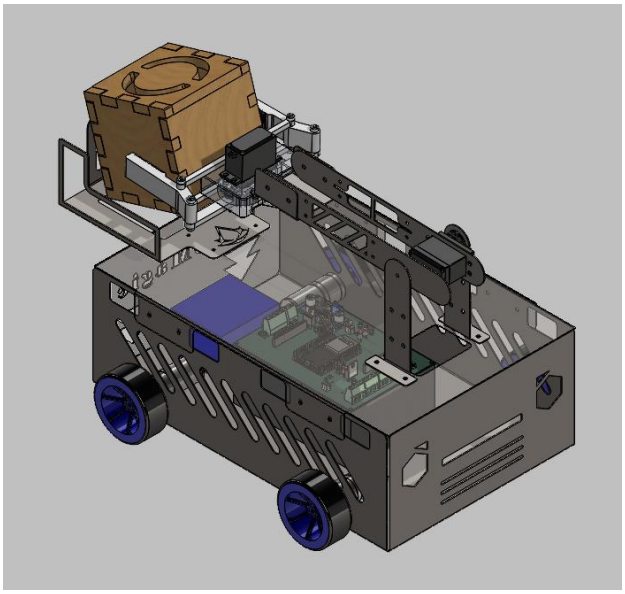

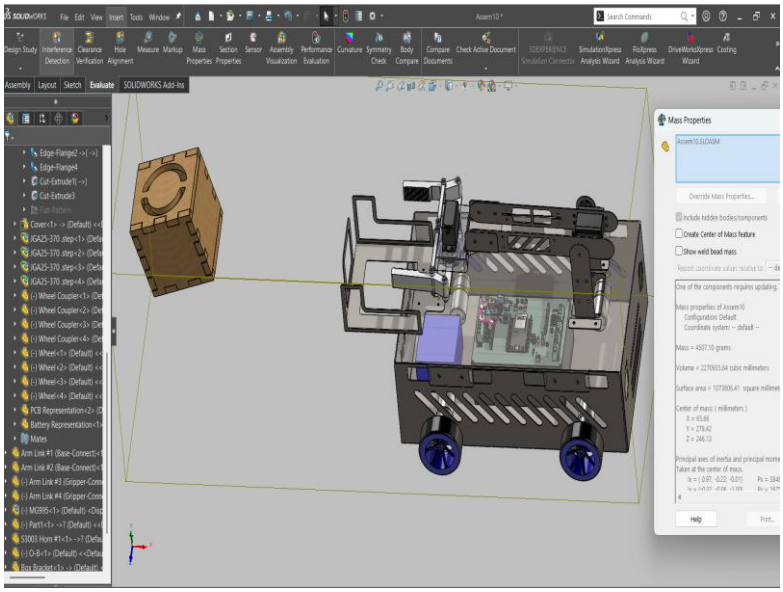

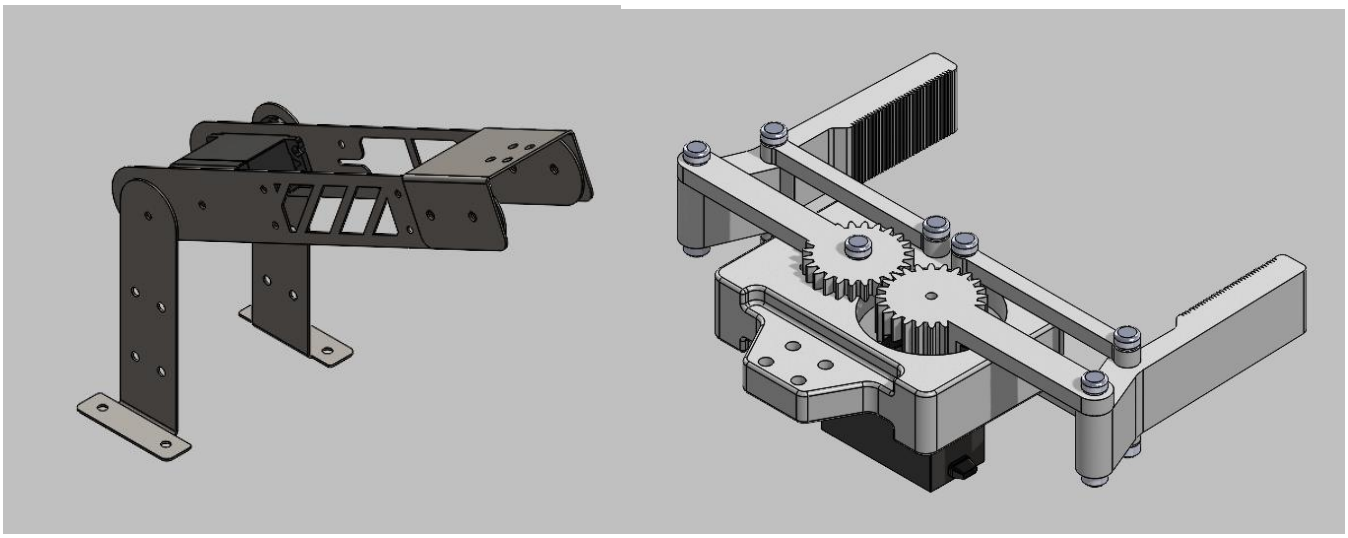

HARDWARE DOCUMENTATION:

POWER SOURCE: HIGH-CAPACITY LI-ION/LIFEPO4 PACK

THE ROBOT IS POWERED BY A CENTRAL HIGH-ENERGY DENSITY BATTERY PACK DESIGNED FOR EXTENDED RUNTIMES AND HIGH CURRENT DISCHARGE.

- **NOMINAL VOLTAGE:** 12V
- **CAPACITY:** (6000 MAH)
- **CALCULATED ENERGY:** 72WH
- **APPLICATION NOTE:** THIS CAPACITY ALLOWS FOR APPROXIMATELY 1.5 TO 3 HOURS OF CONTINUOUS OPERATION, DEPENDING ON THE LOAD ON THE 4X DC MOTORS, THE MG996R, & THE S3003 SERVOS ACTIVITY.

POWER DISTRIBUTION & REGULATION

THE SYSTEM UTILIZES A DUAL-RAIL POWER ARCHITECTURE TO ISOLATE "NOISY" MOTOR POWER FROM THE "SENSITIVE" LOGIC POWER OF THE ESP32.

12V HIGH-POWER RAIL (UNREGULATED)

- **FEEDS:** 2X L298N MOTOR DRIVERS.
- **PURPOSE:** PROVIDES RAW VOLTAGE TO THE 250 RPM DC MOTORS TO MAXIMIZE TORQUE (8.8 KGF.CM).

5V LOGIC & SERVO RAIL (REGULATED)

- **COMPONENT:** HIGH-EFFICIENCY DC-DC BUCK CONVERTER (XL4005).
- **INPUT: 12V | OUTPUT:** 5V (ADJUSTED).
- **FEEDS:** ESP32 (38-PIN DIP), MG996R SERVO, AND S3003 SERVO.

- **DESIGN NOTE:** THE BUCK CONVERTER MUST BE RATED FOR AT LEAST **3A TO 5A** TO HANDLE THE STALL CURRENT OF THE MG996R (2.5A) WITHOUT DROPPING VOLTAGE TO THE ESP32.

CONTROL & LOGIC: ESP32 (38-PIN DIP)

THE ESP32 ACTS AS THE "BRAIN," MANAGING WIFI/BLUETOOTH CONNECTIVITY AND PWM (PULSE WIDTH MODULATION) SIGNALS FOR SPEED AND POSITION CONTROL.

- **PIN CONFIGURATION:** UTILIZING THE 38-PIN LAYOUT FOR MAXIMUM GPIO AVAILABILITY.
- **PWM CHANNELS:** * 4 CHANNELS FOR DC MOTOR SPEED (L298N ENABLE PINS).
    - 2 CHANNELS FOR SERVO POSITION (MG996R & S3003).
- **LOGIC LEVEL NOTE:** THE ESP32 OPERATES AT **3.3V**. WHILE THE L298N AND SERVOS CAN OFTEN TRIGGER AT 3.3V, A LOGIC LEVEL SHIFTER MAY BE CONSIDERED IF SIGNAL INSTABILITY OCCURS.

MOTOR ACTUATION: DUAL L298N DRIVERS

TO HANDLE FOUR DC MOTORS, TWO L298N H-BRIDGE MODULES ARE USED IN A "SKID-STEER" CONFIGURATION.

DRIVER	CHANNEL	MOTOR POSITION	CONTROL PINS
L298N #1	A / B	FRONT-LEFT / REAR-LEFT	ENA, IN1, IN2, IN3, IN4, ENB
L298N #2	A / B	FRONT-RIGHT / REAR-RIGHT	ENA, IN1, IN2, IN3, IN4, ENB

EXPORT TO SHEETS

- **HEAT DISSIPATION:** DUE TO THE 1MM STEEL CHASSIS, THE L298N HEAT SINKS CAN BE THERMALLY COUPLED TO THE CHASSIS TO ACT AS A SECONDARY HEAT SPREADER.
- **VOLTAGE DROP:** NOTE THAT THE L298N HAS AN INTERNAL VOLTAGE DROP OF ABOUT **1.5V TO 2V**. YOUR MOTORS WILL EFFECTIVELY SEE ~10V FROM THE 12V BATTERY.

WIRING & SAFETY

- **COMMON GROUND:** ALL COMPONENTS (BATTERY, BUCK CONVERTER, L298NS, AND ESP32) MUST SHARE A **COMMON GROUND (GND)** TO ENSURE SIGNAL INTEGRITY.
- **FUSE PROTECTION:** A **10A INLINE FUSE** IS RECOMMENDED BETWEEN THE BATTERY AND THE 12V RAIL TO PROTECT THE 6000MAH PACK FROM ACCIDENTAL SHORTS AGAINST THE STEEL BODY.
- **GAUGE:** USE 18AWG WIRE FOR THE 12V MOTOR LINES AND 22AWG FOR THE 5V LOGIC LINES.

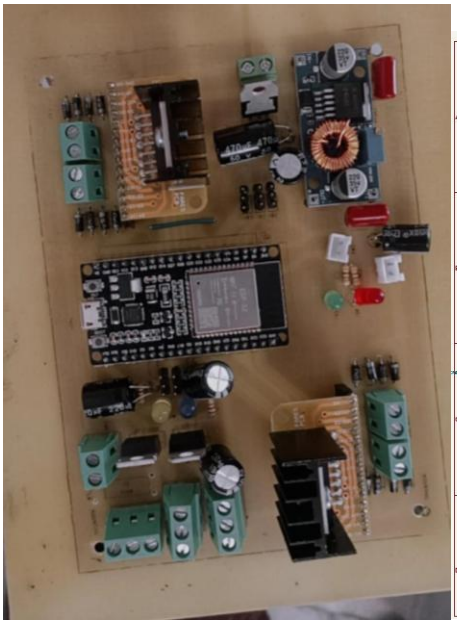

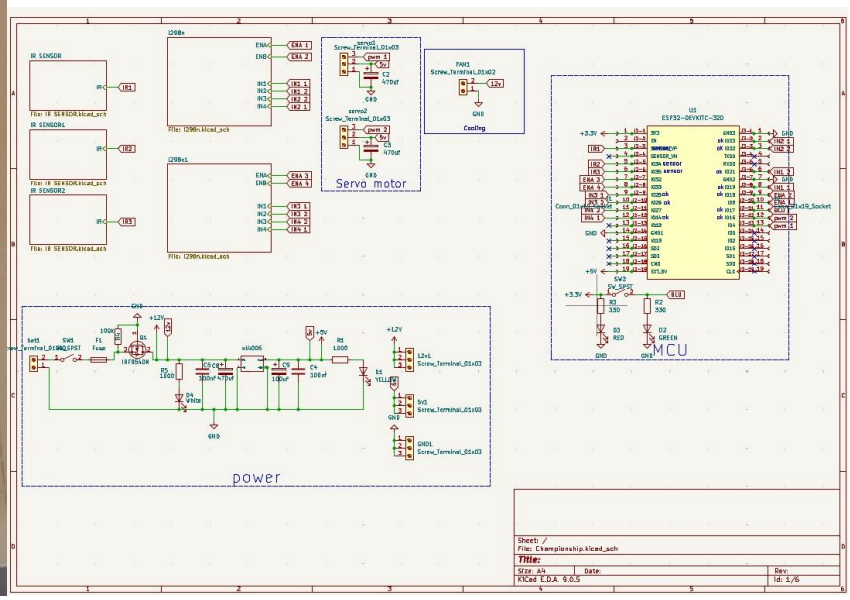
IR SENSOR
IR SENSOR1
IR SENSOR2
L298n
L298n1
Servo motor
Cooling
MCU
power
Sheet: /
File: Championship.kicad_sch
Title:
Size: A4
Date:
Rev:
KiCad E.D.A. 6.0.5
Id: 1/6

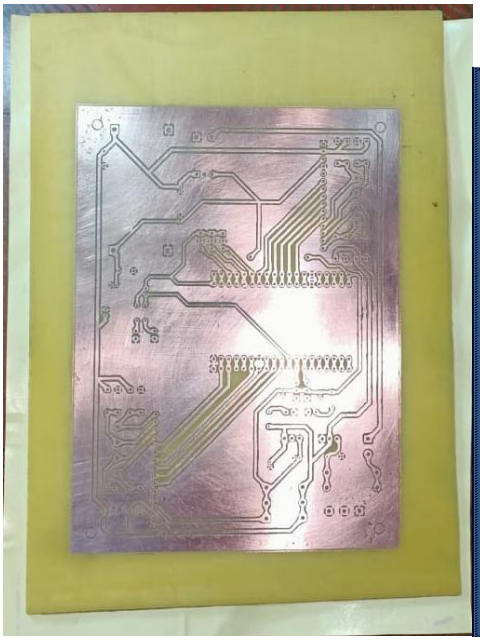

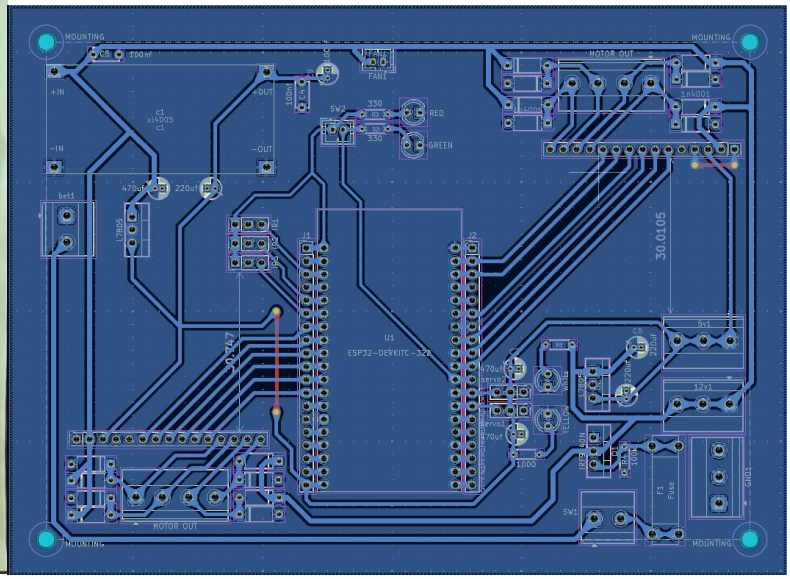
MOUNTING
MOTOR OUT
U1
ESP32-DEVKITC-32D
30.0105
30.0247

SOFTWARE DOCUMENTATION:

SYSTEM OVERVIEW & CONTROL MODES

THE ROBOT OPERATES AS A **DUAL-MODE MOBILE MANIPULATOR.** A PHYSICAL HARDWARE SWITCH TOGGLES THE ESP32 BETWEEN TWO DISTINCT STATES:

- **MODE A: AUTONOMOUS LINE FOLLOWING:** USES A 3-CHANNEL IR SENSOR ARRAY TO NAVIGATE PRE-MARKED PATHS.
- **MODE B: MANUAL REMOTE CONTROL:** USES BLUETOOTH (HID) TO INTERFACE WITH A PS4 CONTROLLER FOR 4WD MOVEMENT AND 2-DOF ARM MANIPULATION.

DRIVETRAIN & LOCOMOTION LOGIC

THE ROBOT UTILIZES A **4-WHEEL DRIVE (4WD) TANK DRIVE** CONFIGURATION. FOR SIMPLIFIED CONTROL, THE MOTORS ARE PAIRED (LEFT FRONT/REAR AND RIGHT FRONT/REAR).

- **ACTUATION:** 4 DC MOTORS.
- **SPEED CONTROL:** 8-BIT PWM (TO) VIA ESP32 LEDC OR PWM PINS.
- **DIRECTIONAL CONTROL:** 2 DIGITAL PINS PER MOTOR PAIR (H-BRIDGE LOGIC).
- **MOVEMENT PROFILES:** * **FORWARD/BACKWARD:** BOTH SIDES SYNC.
    - **PIVOT TURN:** ONE SIDE SLOWS DOWN (SOFT CURVE).
    - **SPIN-IN-PLACE:** SIDES ROTATE IN OPPOSITE DIRECTIONS.

AUTONOMOUS LOGIC: LINE FOLLOWING

THE SYSTEM PROCESSES FEEDBACK FROM THREE **ACTIVE LOW IR SENSORS** (LEFT, CENTER, RIGHT).

SENSOR STATE	PHYSICAL MEANING	ROBOT ACTION
MIDDLE = LOW	LINE CENTERED	MOVE FORWARD
LEFT = LOW	VEERING RIGHT	SOFT LEFT CURVE (ADJUST SPEED)
RIGHT = LOW	VEERING LEFT	SOFT RIGHT CURVE (ADJUST SPEED)
TWO SENSORS = LOW	SHARP TURN	STRONG SPIN CORRECTION
ALL SENSORS = HIGH	LINE LOST	**MEMORY LOGIC:** SPINS IN THE LAST KNOWN DIRECTION FOR A SET DURATION; STOPS IF THE LINE IS NOT RE-ACQUIRED.

MANUAL LOGIC: PS4 REMOTE CONTROL

THE ESP32 ESTABLISHES A BLUETOOTH CONNECTION TO A PS4 CONTROLLER.

- **JOYSTICK MAPPING:** THE LEFT JOYSTICK VALUES (X AND Y AXES) ARE MIXED TO CALCULATE DIFFERENTIAL STEERING SPEEDS FOR THE LEFT AND RIGHT MOTOR BANKS.
- **DEADZONE MANAGEMENT:** A SOFTWARE THRESHOLD IS APPLIED TO JOYSTICK INPUTS TO IGNORE "STICK DRIFT" OR ACCIDENTAL MICRO-MOVEMENTS WHEN THE STICKS ARE CENTERED.
- **ARM MANIPULATION:**

- **MG996R (ARM ROTATION):** CONTROLLED VIA SPECIFIC BUTTONS (E.G., L1/R1 OR D-PAD) WITH SOFTWARE-DEFINED ANGLE LIMITS TO PREVENT MECHANICAL STRAIN ON THE 1MM STEEL FRAME.
- **S3003 (GRIPPER):** TOGGLE OR BUTTON-HOLD LOGIC TO OPEN AND CLOSE THE JAWS.

SOFTWARE ARCHITECTURE

THE CODE IS MODULARIZED INTO FUNCTIONAL BLOCKS TO ENSURE HIGH PERFORMANCE AND EASY DEBUGGING:

- **MOTOR_DRIVE():** LOW-LEVEL PWM AND GPIO PIN MANAGEMENT.
- **LINE_LOGIC():** INTERPRETS IR SENSOR DATA AND EXECUTES RECOVERY MANEUVERS.
- **REMOTE_HANDLER():** PROCESSES BLUETOOTH PACKETS AND MAPS PS4 INPUTS TO MOTOR/SERVO VARIABLES.
- **SAFETY_CHECK():** ENFORCES SERVO ANGLE LIMITS AND "LINE LOST" TIMEOUTS.

BILL OF MATERIAL:

- 4X JGA25-370 250RPM 8.8KGF.CM (~1200 LE)
- 1X MG996R SERVO MOTOR (CONTINUOUS ROTATION) (195 LE)
- 1X S3003 SERVO MOTOR (CONTINUOUS ROTATION) (150 LE)
- 4X ROBOT WHEEL + COUPLERS (65MM X 25MM) (450 LE)
- 1X BATTERY PACK 12V 6000MAH (900 LE)
- 1X ESP32 38PINS DIP (350 LE)
- 2X L298N MOTOR DRIVE (130 LE)
- 1X XL4005 BUCK CONVERTER (80 LE)
- 1X GRIPPER (PLA / PETG) (300 LE)
- 3X LM393 IR SENSOR (90 LE)
- WIRES / CONNECTERS / TERMINAL BLOCKS (100 LE)
- ELECTRONIC COMPONENTS (MOSFET REGULATORS / DIODES / CAPACITORS / RESISTORS / SWITCHES) (50 LE)
- 1X PCB (100 LE)
- 1X SHEET METAL BODY (550 LE)
- COOLING FAN (40 LE)
- ETCHING ACID (90 LE)
- PLASTIC SPACERS (15 LE)

GRAND TOTAL: 4790 LE (~4800 LE)